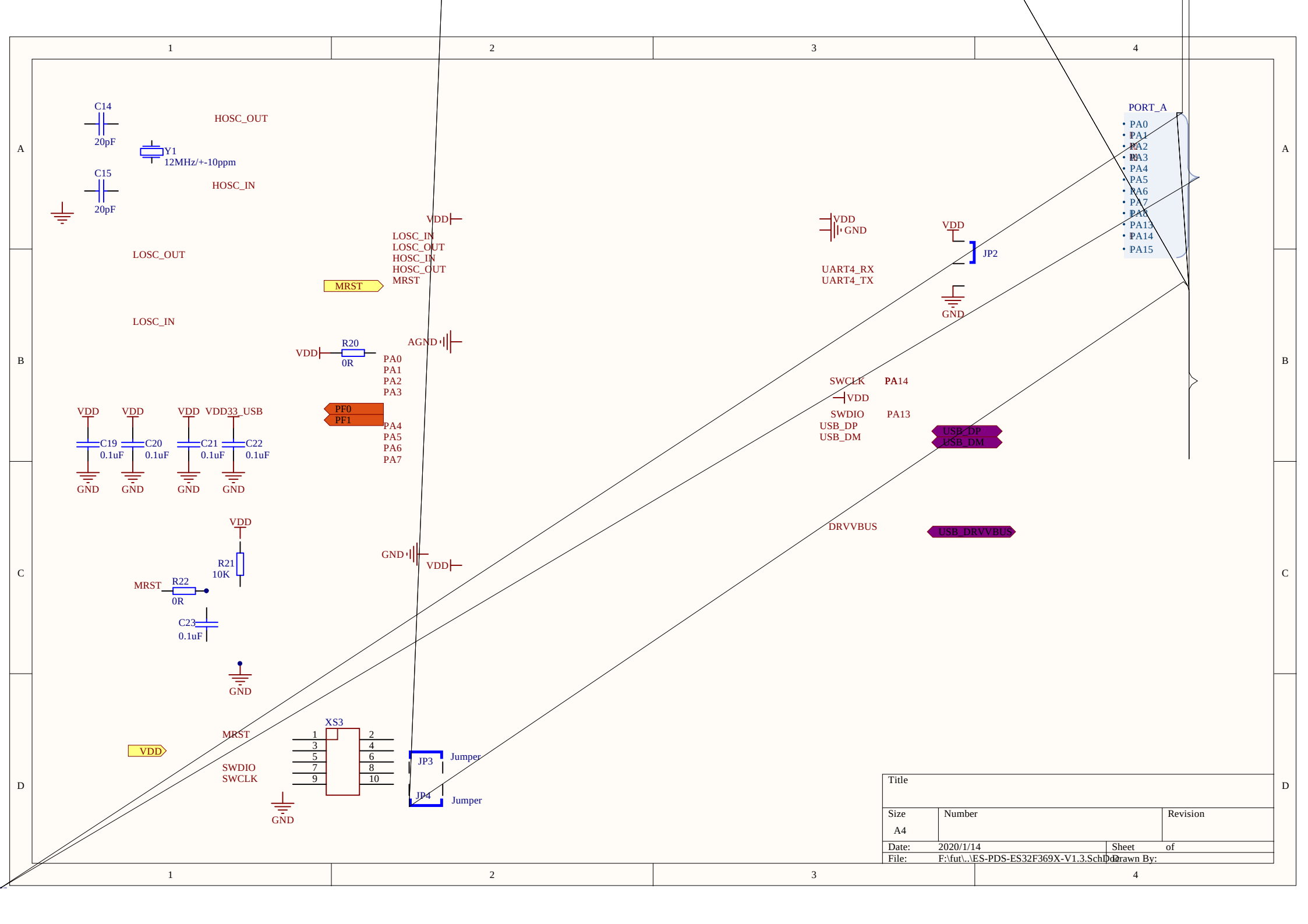
C14
20pF
HOSC_OUT
Y1
12MHz/+-10ppm
C15
20pF
HOSC_IN
LOSC_OUT
LOSC_IN
VDD
LOSC_IN
LOSC_OUT
HOSC_IN
HOSC_OUT
MRST
MRST
R20
0R
AGND
VDD
PA0
PA1
PA2
PA3
PF0
PF1
PA4
PA5
PA6
PA7
VDD
VDD
VDD
VDD33_USB
C19
0.1uF
C20
0.1uF
C21
0.1uF
C22
0.1uF
GND
GND
GND
GND
VDD
R21
10K
MRST
R22
0R
C23
0.1uF
GND
GND
VDD
MRST
VDD
SWDIO
SWCLK
XS3
1
2
3
4
5
6
7
8
9
10
JP3
Jumper
JP4
Jumper
GND
VDD
GND
UART4_RX
UART4_TX
VDD
JP2
GND
PORT_A
PA0
PA1
PA2
PA3
PA4
PA5
PA6
PA7
PA8
PA13
PA14
PA15
SWCLK
PA14
VDD
SWDIO
PA13
USB_DP
USB_DM
USB_DP
USB_DM
DRVVBUS
USB_DRVVBUS
Title
Size
A4
Number
Revision
Date:
2020/1/14
Sheet
of
File:
F:\fut\..\ES-PDS-ES32F369X-V1.3.SchDoc
Drawn By:

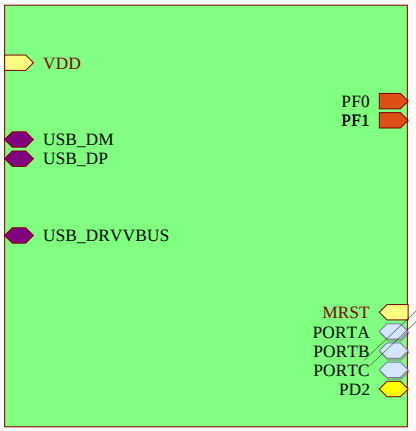

Title			
Size A4	Number		Revision
Date: 2020/1/14		Sheet	of
File: F:\fut\..\MAIN.SchDoc		Drawn By:	

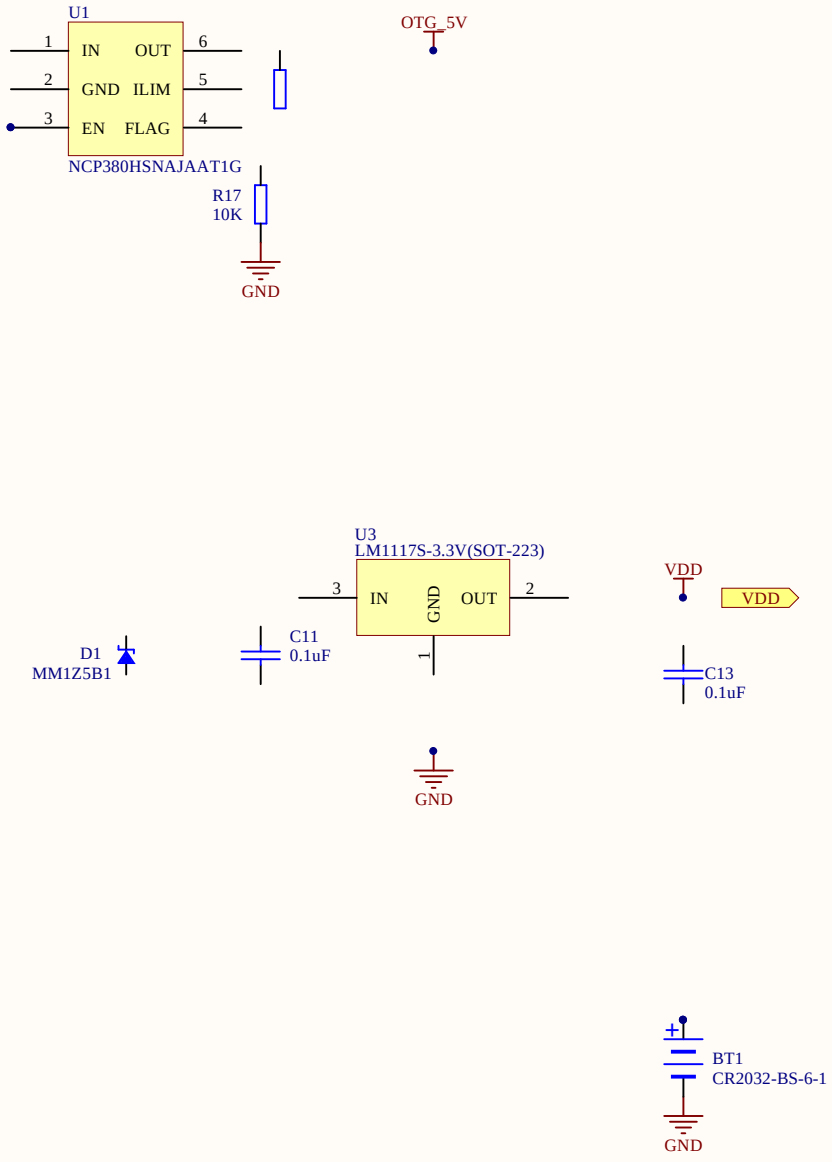

Title		
Size: A4	Number	Revision
Date: 2020/1/14		Sheet of
File: F:\fut\..\POWER.SchDoc		Drawn By: